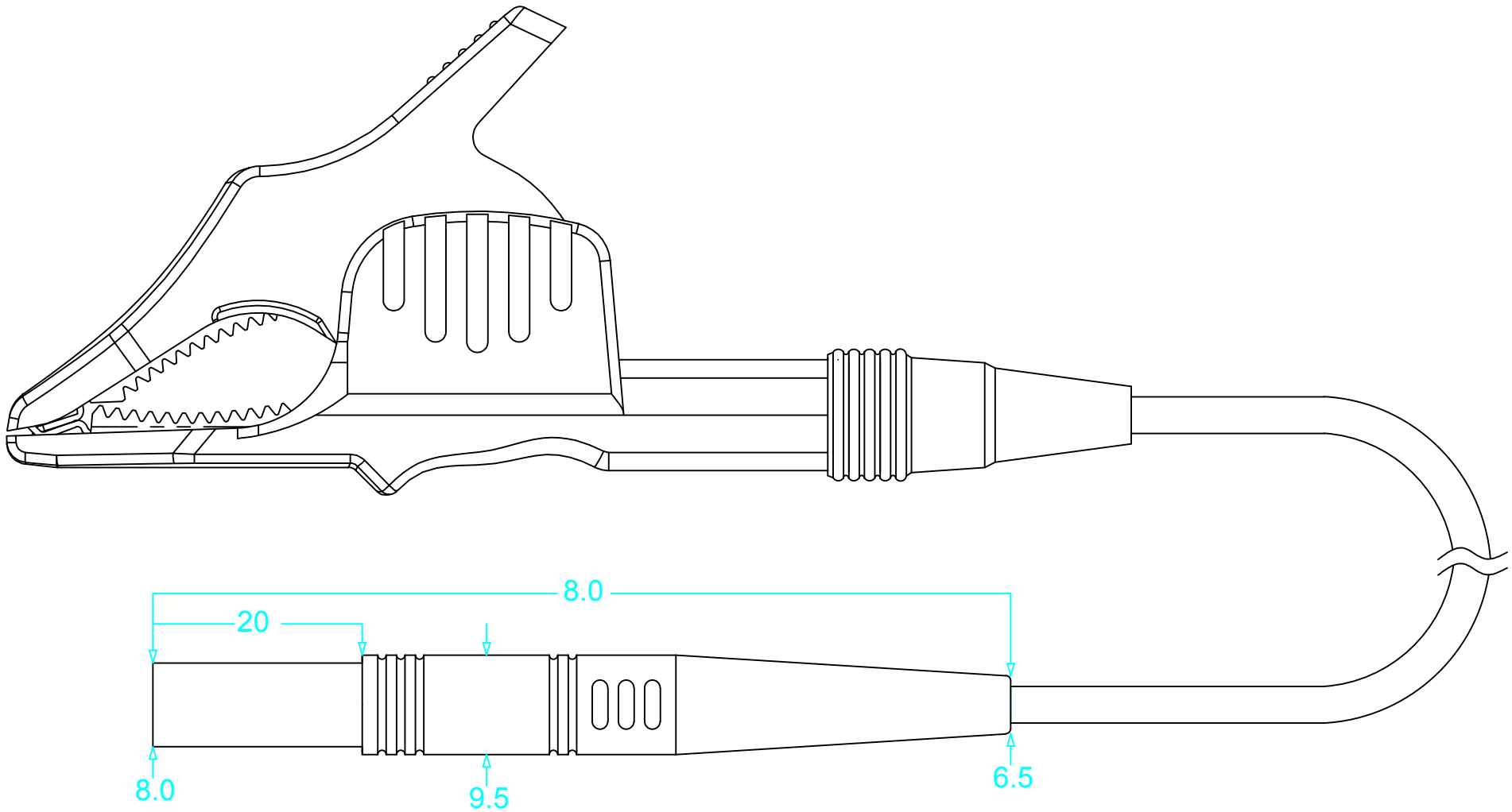
8.0
20
8.0
9.5
6.5